0 603 307 103
Stand ~~09-06~~
Issue 06-11-07

Fig./Abb. 1

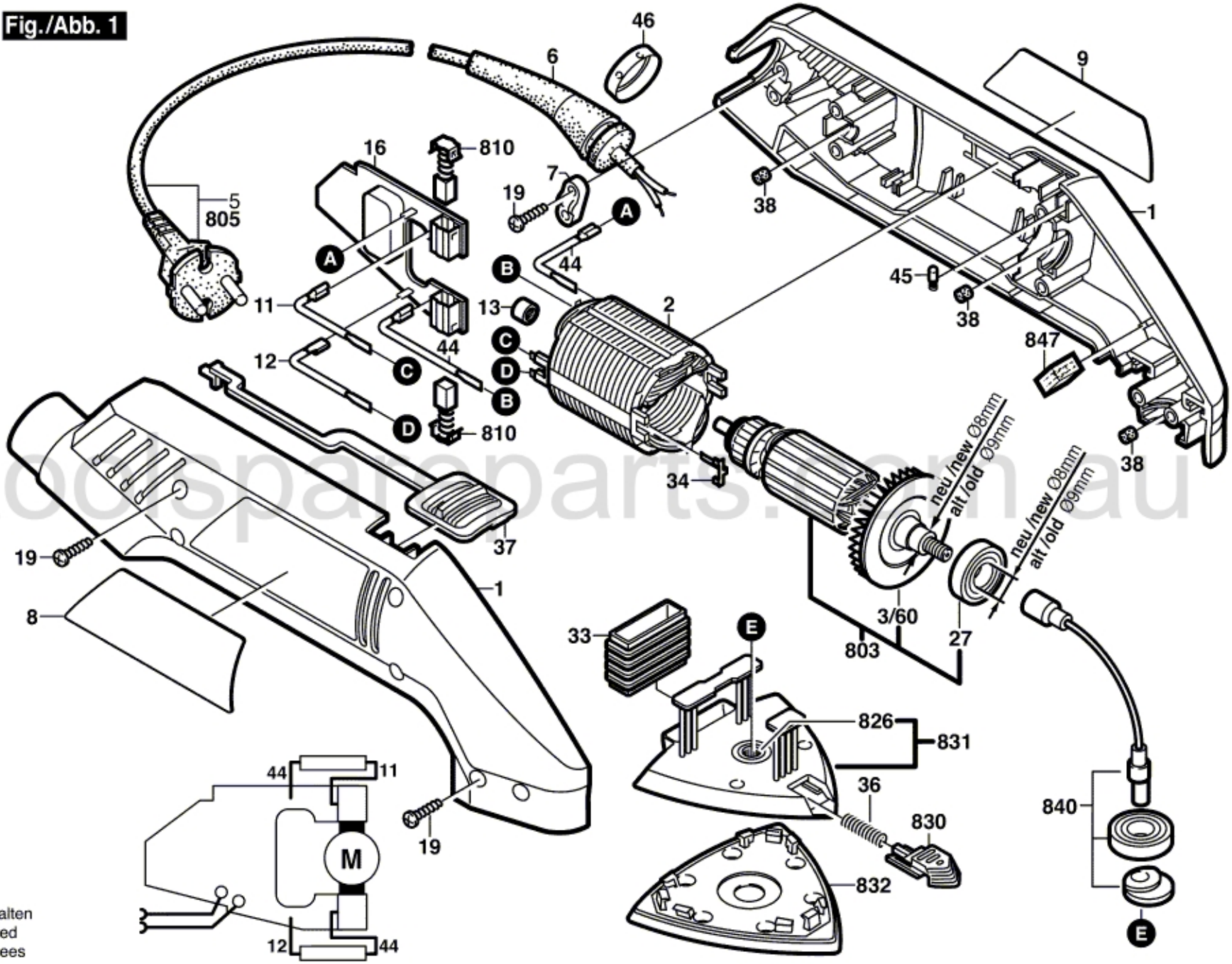

toolspareparts.com.au

Änderungen vorbehalten
Modifications reserved
Modifications reservees
Salvo modificaciones